CENTRIFUGE DECANTER 500

ELECTRIC DRIVE - HIGH CAPACITY

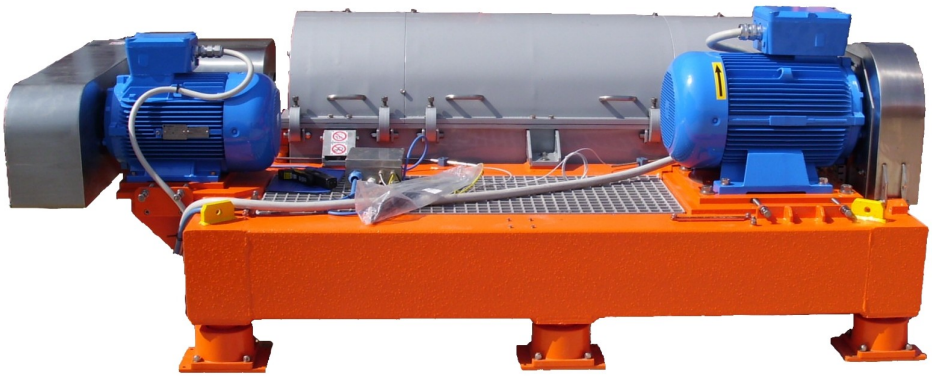

ENVIRONMENTAL SOLUTIONS

MI SWACO

A Schlumberger Company

CD 500

High Capacity - Performance Centrifuge

APPLICATIONS

Global drilling projects where the best efficient fluids/solids separation is required.
CD500 is also designed for barite recovery and dewatering.

PROBLEMS

Big volume to process, strong environmental conditions and best solids removal or barite recovery.

SOLUTIONS

M-I SWACO CD500 has to be your choose in order to assist at best drilling operations in a unique footprint unit.

ECONOMICS

By producing drier solids CD 500 reduce the cuttings volume decreasing the total amount of waste and the associated costs.
In addition an efficient separation minimize the loss of the expensive mud fluid.

ENVIROMENTALS

An efficient separation is not only better under an economical point of view but it is preferable for the environmental preservation too.

Unit Descriptions

The CD 500 is fitted for high capacity drill solids removal and high speed separation. The separation process is performed via PLC (Programmable Logic Controller) that acts on the inverters placed inside the VFD (Variable Frequency Drive). In this way the supply frequencies are varied for the independent control of bowl and conveyor motors. Thus CD 500 experiences less probability of solids pack-off producing dryer cuttings and cleaner effluents than conventional centrifuges.
The unit requires fewer operating personnel and the command could be either automatic or manual. The adjustments are performed and monitored through the screen on board the VFD panel that also provides the reading of the sensors output (bearings temperatures, vibrations, pressures, speeds...)

Feature and benefits

- High Volume:
  Process up to 242Gpm
- Variable Speed Bowl:
  From 0 to 3000 rpm
- High force G:
  Up to 2334g at 3000rpm
- High Sigma Value:
  Up to 4275m^2 at 3000rpm
- Variable speed scroll:
  Differential regulation from 1 to 49rpm
- Feed pump speed variable:
  To improve solids control efficiency
- Higher solids removal than conventional centrifuge
- Higher barite recovery than conventional centrifuge
- Automatic and manual control
- Programmable Logic Controller (PLC):
  To protect, control and optimize the performance of the machine and to avoid solids pack off.
- Higher torque resistance than conventional centrifuge
- Solids pack-off removal device
- CD 500 HC respects all the rules both onshore and offshore
- Low production time
- 24/24h technical assistance

MI SWACO

A Schlumberger Company

CD 500

High Capacity - Performance Centrifuge

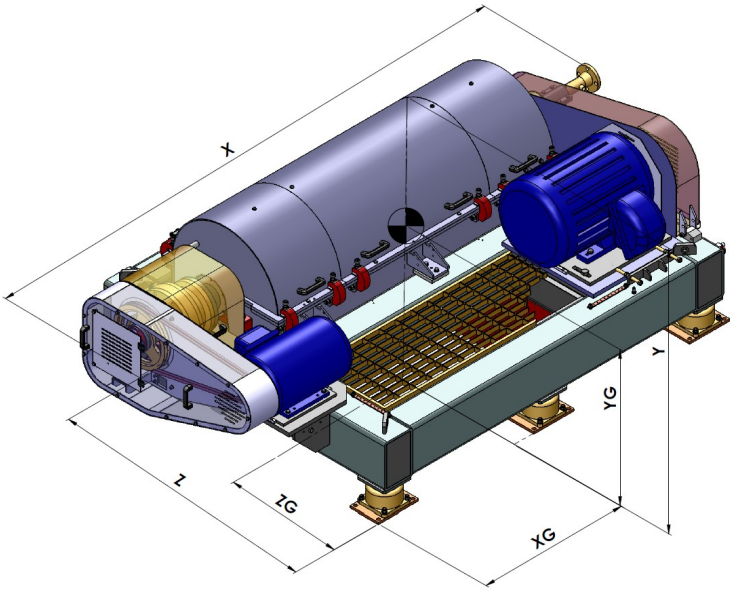

Physical Data

Overall Dimension and Weight

Length X:	*3409 mm (134,21”)*
Height Y:	*1025 mm (40,35”)*
Width Z:	*2000 mm (78,74”)*
Total Weight:	*4285 kg (9447lbs)*

Center of Gravity Position

Length XG:	*1232 mm (48,50”)*
Height YG:	*567 mm (22,32”)*
Width ZG:	*1033 mm (40,67”)*

Nozzle Schedule

Feed pipe flange:	*2” with flange ANSI B 16.5*
Liquid discharge connection flange:	*1 x 8” Victaulic*
Solid discharge connection flange:	*810mm x 450mm (31,89” x 17,62”)*

MI SWACO

A Schlumberger Company

CD 500

High Capacity - Performance Centrifuge

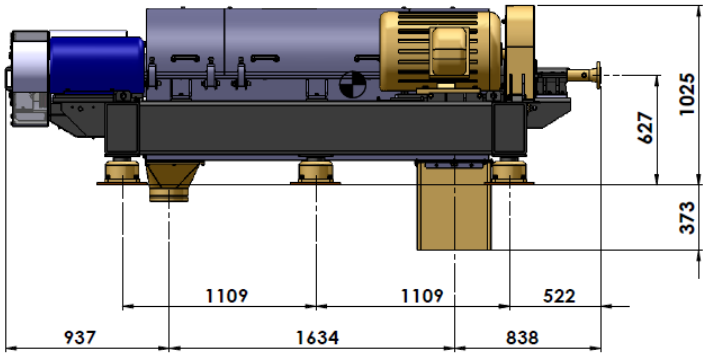

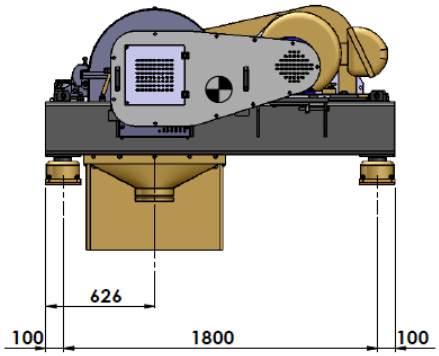

Physical Data

Centrifuge

Bowl length (internal):	*1715mm (67,52")*
Bowl diameter (internal):	*472mm (18,58")*
Bowl speed range	*0 - 3000 rpm*
Maximum G force:	*2334g (at 3000rpm)*
Sigma value max:	*4275m^2*
Conveyor speed range:	*1 - 49rpm with Sumitomo (1 - 40 with Akim)*
Conveyor pitch:	*130mm (5,12")*
Maximum solids discharge rate:	*14.7m^3/h (65gpm)*
Hydraulic Capacity:	*242 gpm (55.0 m^3/h) at 3000rpm*
(Pond set at 2.60")	*123 gpm (33.6 m^3/h) at 1400rpm*

Gearbox and Drive

Type:	*Sumitomo ZS618 (Akim ZG3700/10)*
Ratio:	*59:1 (80:1)*
Max torque:	*5000Nm with Sumitomo (8500Nm - 6269 ft·Lbs with Akim)*
System power (180kW Required):	*380V@50Hz 3PH or 440V@60Hz 3PH*
Drive system:	*Electric Independent System for Bowl and Scroll Drive*
Main drive:	*60HP (45kW) VFD Driven*
Back drive:	*20HP (15kW) VFD Driven*
Control system:	*PLC controlled in Automatic or Manual mode*

MI SWACO

A Schlumberger Company

CD 500

High Capacity - Performance Centrifuge

Safety Features

- *Torque limiter with torque limiter switch in the back drive to protect the gearbox sun-wheel shaft.*
- *Vibration Sensor to stop the machine in case of high vibration.*
- *Micro-switch on guards (vessel, main and back belts) to avoid centrifuge start up while servicing.*
- *Temperature sensors to prevents bearings failure.*

Certifications

The machine conforms to standard ATEX

Environmental Operating Conditions

Temperature Range : -20°C +40°C

Higher Temperature shall be met (submitted by a specific assessment) and it must be specified on the purchase order (which must be managed as a “special order”).

VFD Module

Designed to control, monitor & record all data from and to the machine. The Variable Frequency Drive can be moved to remote location for remote controls. Alarms and maintenance screen will appear automatically.

Torwue Limiter & Micro Switches

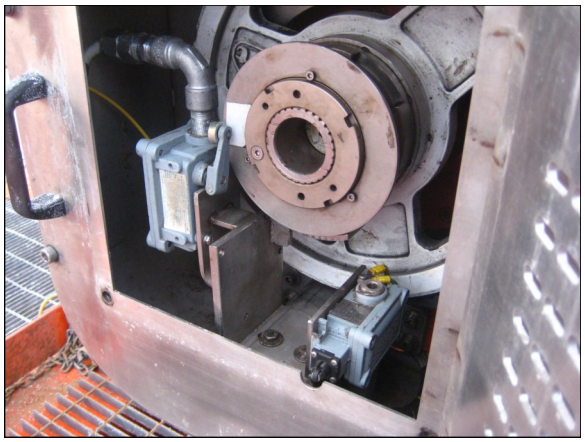

VFD Touch Screen

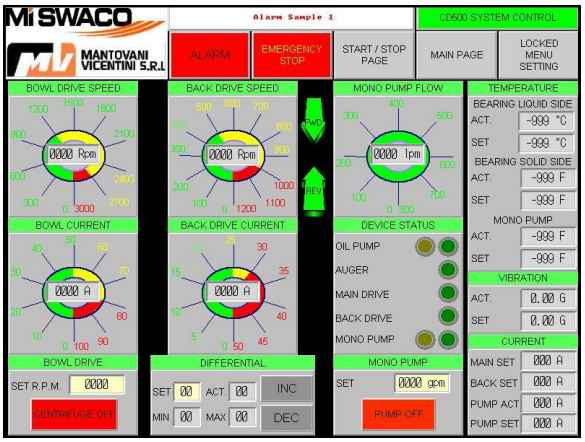

MI SWACO

A Schlumberger Company

CD 500

High Capacity - Performance Centrifuge

Centrifuge Overall

Centrifuge Overall

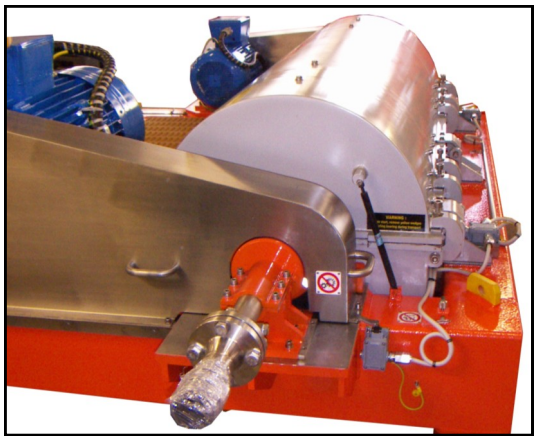

Lifting Points

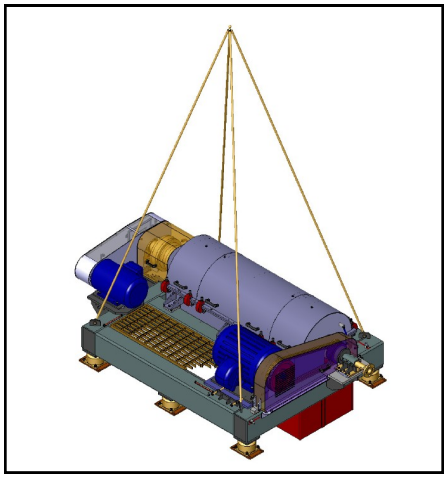

Main and internal Bearings

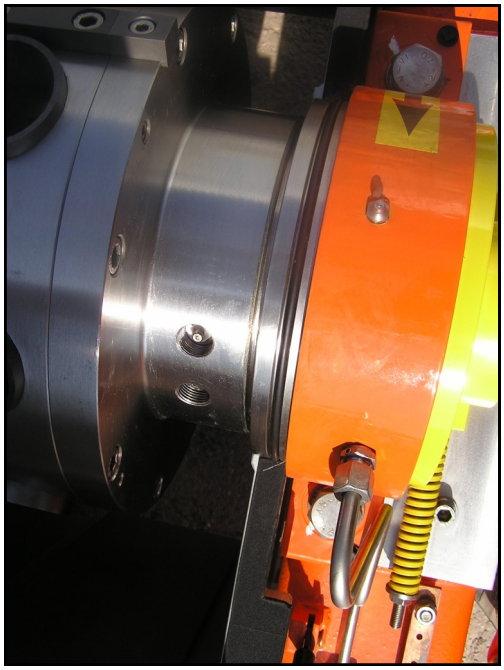

Mantovani & Vicentini S.r.l.
Via Bellaria 228
44033 Berra (Fe)
Italy
Tel. +390532831010
Fax. +39 0532831650
E-mail: info.italy@miswaco.slb.com

MI SWACO

A Schlumberger Company